X

(https://swayam.gov.in) (https://swayam.gov.in/nc_details/NPTEL)

ushawin2020@gmail.com

NPTEL (https://swayam.gov.in/explorer?ncCode=NPTEL) » Introduction to Quantum Computing: Quantum Algorithms and Qiskit (course)

If already registered, click to check your payment status

Course outline

About NPTEL ()

How does an NPTEL online course work? ()

Week 1 ()

Week 2 ()

Week 3 ()

Week 4 ()

NISQ-era quantum

Week 4: Assignment 4

The due date for submitting this assignment has passed.

Due on 2026-02-18, 23:59 IST.

Assignment submitted on 2026-02-18, 20:16 IST

- **This assignment has** 10 **questions of the multiple choice type.**
- **Each question can have multiple correct options. If you indicate *all* the correct answers, you get 2 marks.**
- **No marks will be awarded if you indicate an incorrect answer.**
- **If you indicate some, but not all correct answers, you get** 1 **mark.**

1) Which of the following statements regarding Variational Quantum Algorithms (VQAs) are correct? (Select all that apply) ***1 point***

- [x] Classical part of the VQA calculates the cost function
- [ ] A shallow and faithful cost function is desirable
- [ ] Problem-agnostic ansatz perform better than Problem-inspired ansatz
- [x] Randomly initialized deep Quantum Circuits exhibit Barren Plateau

No, the answer is incorrect.
Score: 0

Accepted Answers:
A shallow and faithful cost function is desirable
Randomly initialized deep Quantum Circuits exhibit Barren Plateau

Fig. 1 shows quantum circuit used in molecular simulations using VQE implementation by Kandala et. al.1 . Answer the following questions 2 and 3, with reference to Fig. 1.

algorithms (unit?unit=43&lesson=44)
- Variational Quantum Algorithms (unit?unit=43&lesson=45)
- Variational Quantum Eigensolver (unit?unit=43&lesson=46)
- Quantum Generative Adversarial Networks (QGANs) (unit?unit=43&lesson=47)
- Fixing quantum errors with quantum tricks: A brief introduction to Quantum Error Correction - Part 1 (unit?unit=43&lesson=48)
- Fixing quantum errors with quantum tricks: A brief introduction to Quantum Error Correction - Part 2 (unit?unit=43&lesson=49)
- Fixing quantum errors with quantum tricks: A brief introduction to Quantum Error

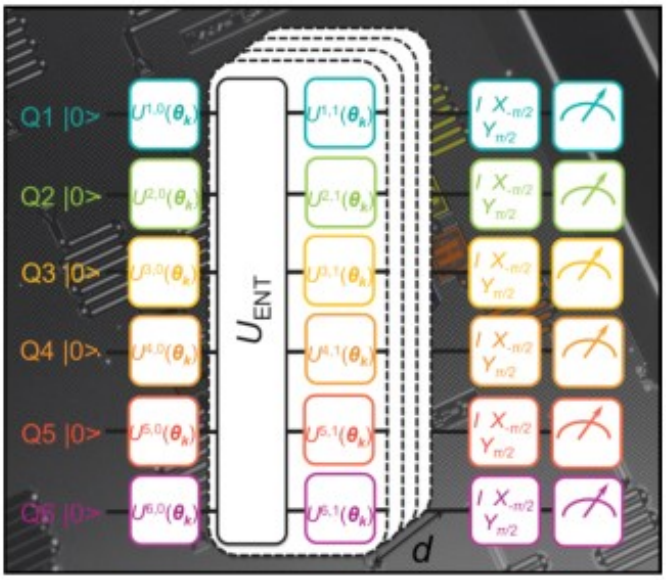

Figure 1: Quantum circuit implementing VQE algorithm.

2) Select all the statements that hold for U_{ENT} and the unitaries $U^{i,j}(\Theta_k)$. ***1 point***

- [x] Together, U_{ENT} and the unitaries $U^{i,j}(\Theta_k)$ form the trial state.
- [x] U_{ENT} refers to "entangling block".
- [ ] The unitaries $U^{i,j}(\Theta_k)$ are multiqubit unitaries.
- [x] The state created by these unitaries have both superposition and entanglement.

Yes, the answer is correct.
Score: 1

Accepted Answers:
Together, U_{ENT} and the unitaries $U^{i,j}(\Theta_k)$ form the trial state.
U_{ENT} refers to "entangling block".
The state created by these unitaries have both superposition and entanglement.

3) The number of layers d is primarily a function of ***1 point***

- ( ) the gates being performed
- ( ) the number of qubits in the system.
- ( ) both (a) and (b).
- (•) the available depth or coherence time.

Yes, the answer is correct.
Score: 1

Accepted Answers:
the available depth or coherence time.

4) Quantum Generative Adversarial Networks (QGANs) consists of: ***1 point***

- [ ] Encoder
- [x] Generator
- [ ] Decoder

Correction - Part 3 (unit?unit=43&lesson=50)

Week 4: Lecture notes (unit?unit=43&lesson=51)

Week 4 Feedback Form: Introduction to Quantum Computing: Quantum Algorithms and Qiskit (unit?unit=43&lesson=52)

Quiz: Week 4: Assignment 4 (assessment?name=83)

Download Videos ()

Live Sessions ()

Transcripts ()

- [x] Discriminator

Yes, the answer is correct.
Score: 1

Accepted Answers:
Generator
Discriminator

5) Which of the following statements is an accurate description of the phenomenon of decoherence? ***1 point***

- [x] Decoherence causes a pure quantum state to transform into an incoherent mixture of multiple states.
- [ ] Decoherence is caused when a quantum system evolves with time via a unitary transformation.
- [x] Decoherence is caused when a quantum system is coupled to a bath or environment and the joint system evolves via a unitary transformation.
- [ ] Decoherence is a reversible process.

Yes, the answer is correct.
Score: 1

Accepted Answers:
Decoherence causes a pure quantum state to transform into an incoherent mixture of multiple states.
Decoherence is caused when a quantum system is coupled to a bath or environment and the joint system evolves via a unitary transformation.

6) Select all the options that apply to the three-qubit quantum error correcting code. ***1 point***

- [x] The three-qubit code assumes that the bit-flip noise occurs identically and independently on the encoded qubits.
- [ ] The encoding transforms the state $\alpha|0\rangle + \beta|1\rangle$ to $(\alpha|0\rangle + \beta|1)\rangle^{\otimes 3}$ where $|\alpha|^2 + |\beta|^2 = 1$.
- [x] The bit-flip noise flips the qubit with some probability p and leaves it untouched with probability $1 - p$.
- [x] The encoding transforms the state $\alpha|0\rangle + \beta|1\rangle$ to $(\alpha|000\rangle + \beta|111\rangle)$ where $|\alpha|^2 + |\beta|^2 = 1$.

Yes, the answer is correct.
Score: 1

Accepted Answers:
The three-qubit code assumes that the bit-flip noise occurs identically and independently on the encoded qubits.
The bit-flip noise flips the qubit with some probability p and leaves it untouched with probability $1 - p$.
The encoding transforms the state $\alpha|0\rangle + \beta|1\rangle$ to $(\alpha|000\rangle + \beta|111\rangle)$ where $|\alpha|^2 + |\beta|^2 = 1$.

7) Let $S1$ and $S2$ denote the syndrome bits at the end of the 3-qubit bit-flip quantum error correction protocol. Match the syndrome bit values to their respective recovery gates. ***1 point***

Syndrome (S1, S2)	Recovery Gates
x. (0, 1)	i. $I \otimes I \otimes X$
y. (1, 1)	ii. $X \otimes I \otimes I$
z. (1, 0)	iii. $I \otimes X \otimes I$

- x-i, y-ii, z-iii
- x-i, y-iii, z-ii
- x-ii, y-iii, z-i
- x-iii, y-i, z-ii

No, the answer is incorrect.
Score: 0

Accepted Answers:
x-i, y-iii, z-ii

8) Analyse the following 7-qubit circuit and answer the question. ***1 point***

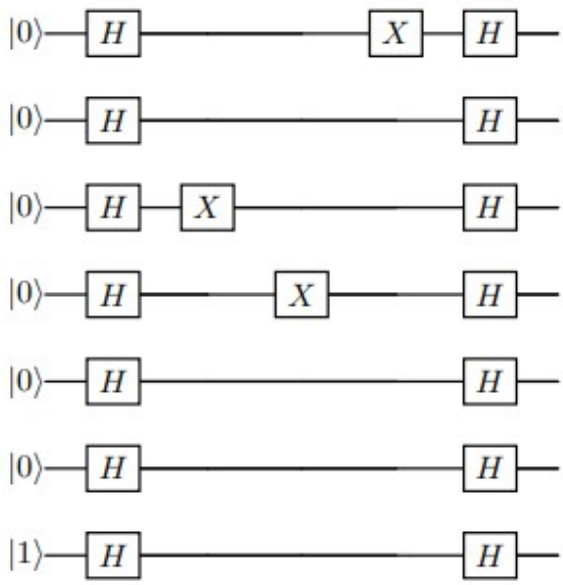

What is the probability for *all* of the first 6 wires to output 0 when measured at the end of this circuit?

- 1/64
- 1/2
- 0
- 1

No, the answer is incorrect.
Score: 0

Accepted Answers:
1

9) Consider the encoded (or logical) state $|\psi_L\rangle = \alpha|000\rangle + \beta|111\rangle$ subject to a quantum noise channel where each qubit can undergo a bit flip with probability p. The exact probability that the 3-qubit bit-flip quantum error correcting code fails to recover the original state is given by $x \cdot p^y \cdot (1-p)^z + p^3$, where p is the bit-flip probability and x, y, z are the variables to be identified. The value of $y \cdot x + z$_____. (here, $\cdot$ denotes multiplication) ***1 point***

- 6
- 7
- 10
- 5

Yes, the answer is correct.
Score: 1

Accepted Answers:
7

10) Consider a 3-qubit state in the $\{|+\rangle, |-\rangle\}$ basis, of the form $\frac{1}{\sqrt{2}}(|+++\rangle + |---\rangle)$. Which of the following sets of errors can be detected on this state? ***1 point***

- $\{XII,\ IXI,\ IIX\}$
- $\{IZI,\ ZIZ\}$
- $\{ZII,\ IZI,\ IIZ\}$
- $\{ZII,\ IZZ,\ ZZZ\}$

Yes, the answer is correct.
Score: 1

Accepted Answers:
$\{ZII,\ IZI,\ IIZ\}$